Dimensions are preliminary.
Not for installation design – for planning purposes only.

Plan Dimensions: 39" x 39"
Height: 11'

For drums up to 95 gallon overpacks. (Steel overpacks are typically 85 gal.)

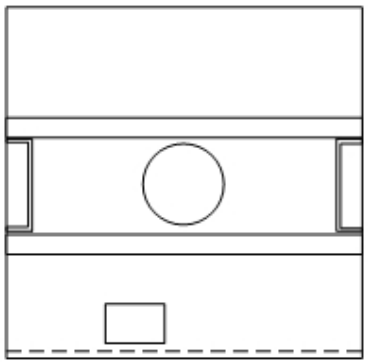

Top View

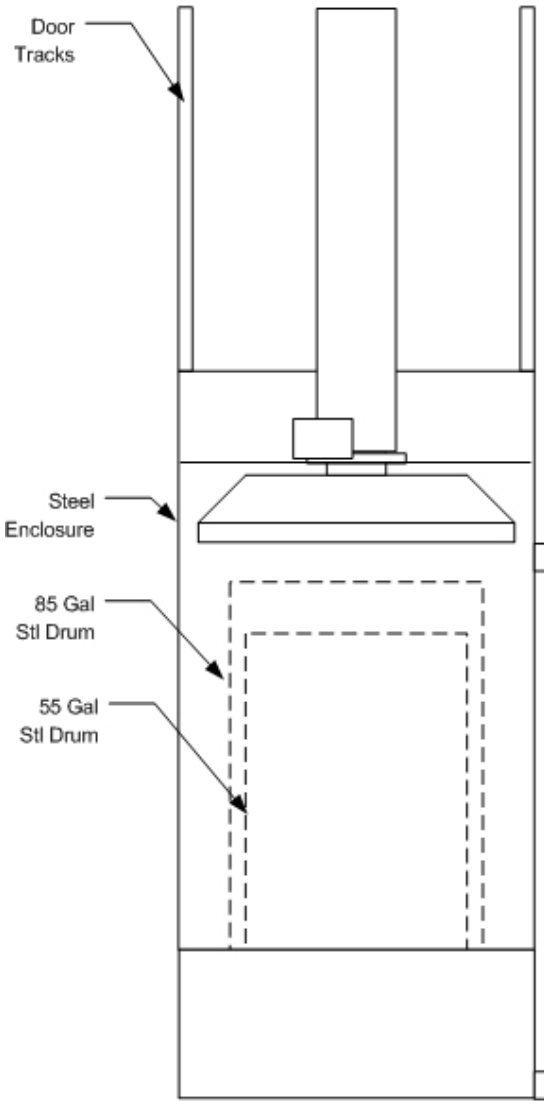

Front View

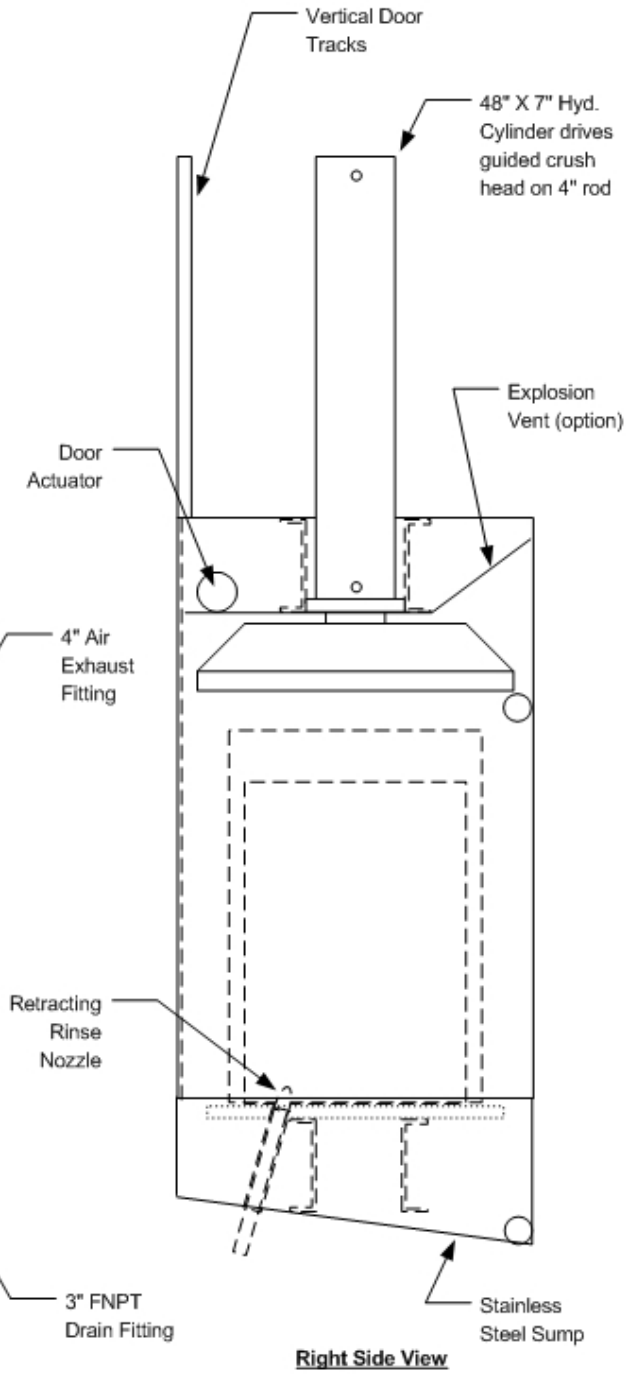

Right Side View

Drum Recycler I Process Skid

CUSTOMER

REVISED 4/9/2005

FILENAME PROCESS SKID - DR I.VSD

UNIT

DESIGNED AND MANUFACTURED BY
New Ecology Systems, LLC
www.DrumRecycler.com
713/660-7986

Drum Recycler I